LEFT SIDE PANEL

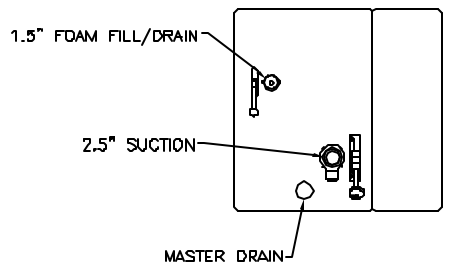

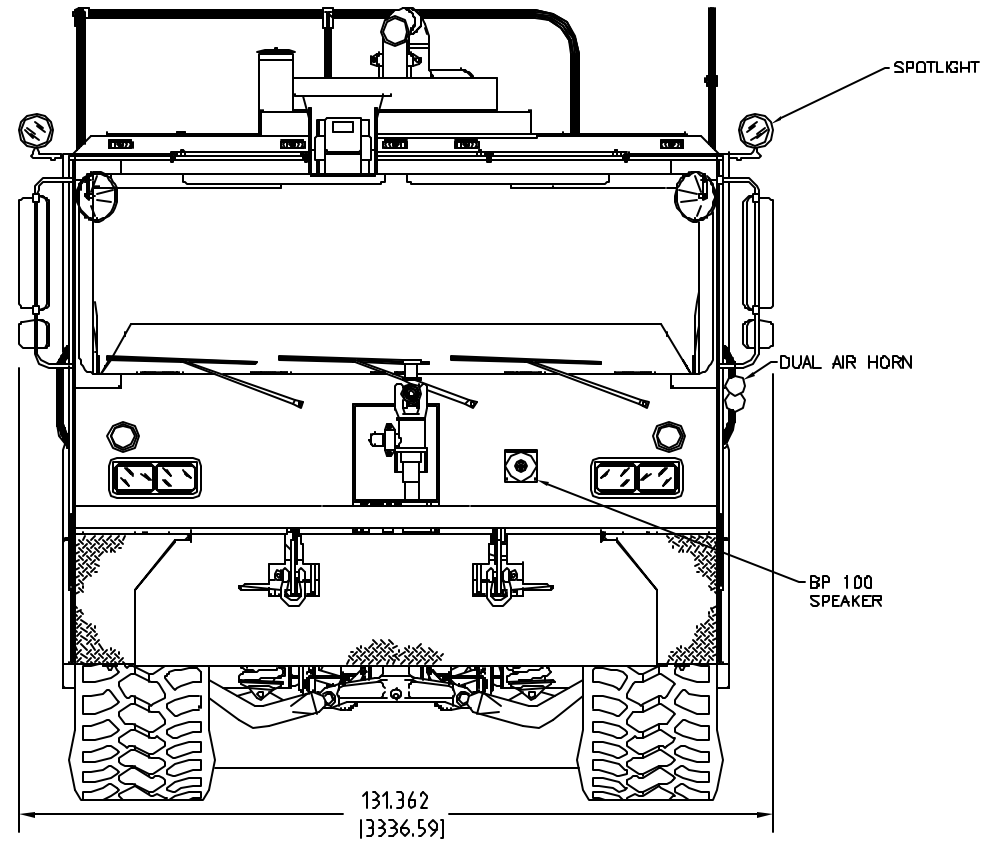

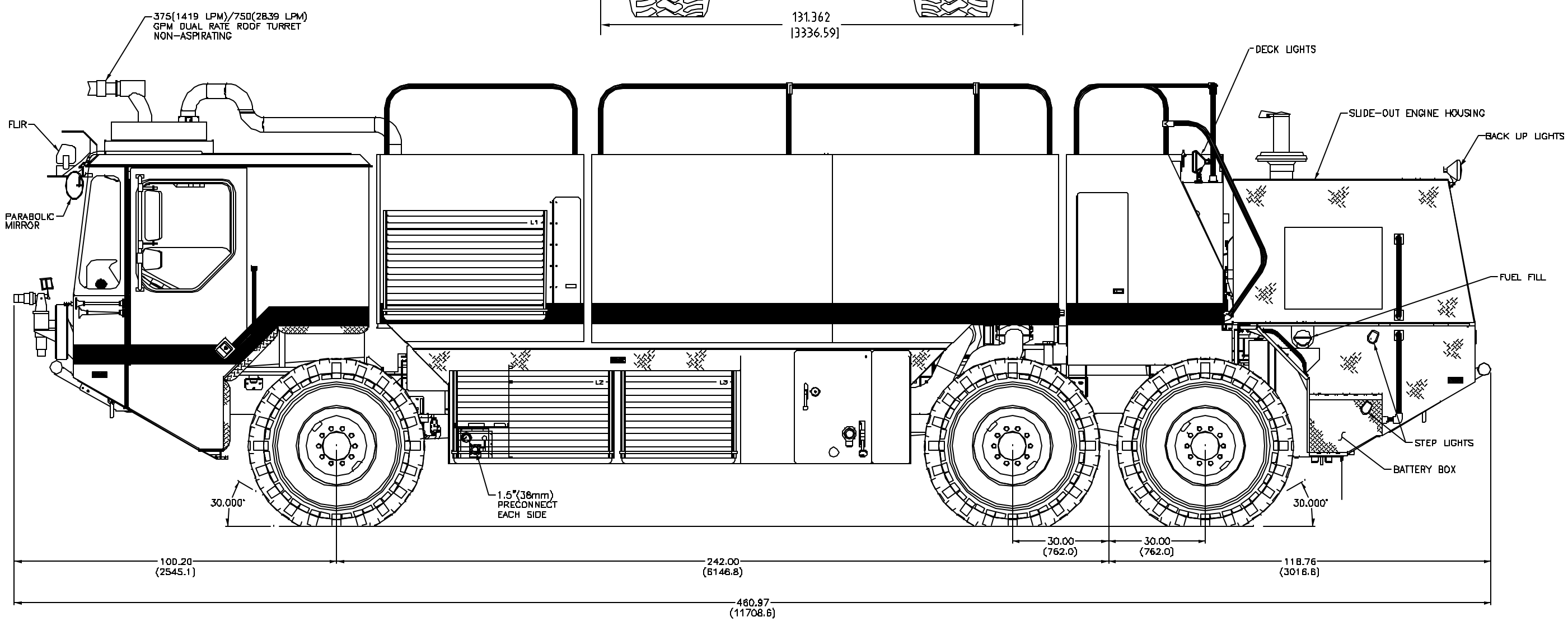

DEALER APPROVAL

DATE

CUSTOMER APPROVAL

DATE

☐ AS IS ☐ WITH REVISIONS

CUSTOMER

TITAN HPR 6X6
INDEPENDENT SUSPENSION

[redacted]

DRY CHEM	500 (227kg) POUNDS
WATER TANK	3000 (11355L) GALLONS
FOAM TANK	400 (1514L) GALLONS
PUMP	1500 (5678 LPM) GPM
WHEELBASE	242 (6147mm) INCHES

P511	NOT TO SCALE	BY: NAME
	{ } = METRIC	DATE: 00-00-00
	INTERNATIONAL	WORK No. 00000

This print is the property of EMERGENCY ONE INC and is loaned to you subject to return on demand unless otherwise agreed to in writing by EMERGENCY ONE INC. This contents are confidential and must not be copied or redistributed to other parties for use or manufacture.

SHEET 1 OF 2

#	DESCRIPTION	DATE	APPROVED
A	INITIAL RELEASE	16-JAN-17	SKB